BIOMEDICAL SENSORS

Lecture Notes

Ahmet Ademoglu, *PhD*
Bogazici University
Institute of Biomedical Engineering

Basic Definitons

- A transducer is a device that converts energy from one form into another.
- A sensor converts a physical parameter to an electrical output.
- An actuator converts an electrical signal to a physical output.

Sensors Modalities

- Electrical
- Mechanical
- Optical
- Acoustic
- Chemical
- Thermal

Basic Definitions

- Sensitivity : Ratio of the output change for a given input change or the slope of the calibration curve.

$$S = \frac{\Delta V_{out}}{\Delta V_{in}}$$

- Linearity : measurement of the maximum deviation between calibration curve and fitting curve.

$$\sigma_{lin} = \pm \frac{max(V_{calculated} - V_{fit})}{Y_{max} - Y_o} \times \%100$$

Y_{max} : maximum deviation of output

Y_o : output deviation without any input

- Drift : change in sensor reading when the input keeps constant.
  - Zero Drift : output without any input or with a constant input.

$$D_{zero} = \frac{\Delta Y_o}{Y_{max} - Y_o} \times \%100$$

  - Temperature drift : change of output with the change in temperature.

$$D_{Temp} = \frac{\Delta Y_{max}}{Y_{max} - Y_o \times \Delta T} \times \%100$$

Factors effecting the choice of a transducer

- The magnitude of quantity to be measured.
- The order of accuracy required.
- The static or dynamic character of the process to be studied.
- long-term monitoring.
- Economic considerations.

Classification of Transducers

i) By the process used to convert the signal energy into an electrical signal.
Passive Transducers: a transducer that converts one form of energy directly into another like a photovoltaic cell.
Active Transducers: a transducer that requires energy to be put into it in order to translate changes due to the measurand like a variable resistance placed in a Wheatstone bridge in which the voltage at the output of the circuit reflects the physical variable.

ii) By the physical or chemical principles used like variable resistance devices and optical fibre transducers.

iii) By application for measuring a specific physiological variable like flow transducers, pressure transducers, temperature transducers, etc.

Signals from Cardio-Vascular System

Parameter	*Primary signal characteristics*	*Transducer required*
Blood pressure (arterial, direct)	Frequency range : dc to 200 Hz dc to 40 Hz usually adequate pressure range: 20 to 300 mm Hg; slightly negative in left ventricle	Unbonded wire strain gauge pressure transducer Bonded semiconductor strain gauge transducer Capacitance type pressure transducer Differential transformer
Blood pressure (arterial, indirect)	Frequency range: dc to 5 Hz Pressure range : 20 to 300 mm Hg Microphone: 10 to 100 Hz, signal voltage depends upon the type of microphone used	Low frequency microphone for picking up Korotkoff sounds
Blood pressure (venous, direct)	Frequency range: dc to 40 Hz Pressure range: - 5 to +20 mm Hg	Strain gauge pressure transducer with higher sensitivity
Peripheral arterial blood pressure pulse wave	Frequency range: 0.1 to 50 Hz usually adequate Pulse trace similar to arterial blood pressure waveform	Finger or ear lobe pick up (light source and photocell) and piezoelectric pick-up or by impedance method
Blood flow (aortic or venous)	Rate: 0 to 300 ml/s Frequency range : 0 to 100 Hz	Tracer methods Electromagnetic flowmeter Ultrasonic Doppler flowmeter

Signals from Cardio-Vascular System

Cardiac output (blood flow)	Frequency range: 0 to 60 Hz 0 to 5 Hz usually adequate Blood flow measured as litres per minute (4 to 25 litre/min)	Dye dilution methods Integration of aortic blood flow function Thermal dilution method Electromagnetic flowmeter and Integrator.
Heart rate	Rate: 25 to 300 beats per min. Normal human heart rate at rest 60 to 90 beats/min Normal foetal heart rate: 110 to 175 beats/min	Derived from ECG or arterial blood pressure waveform or photoelectric plethysmograph From foetal phonocardiogram ultrasonic method, scalp electrodes for foetal ECG

Signals from Cardio-Vascular System

Parameter	*Primary signal characteristics*	*Transducer required*
Phonocardiogram (heart sounds)	Frequency range :20 to 2000 Hz Signal voltage depends upon the type of microphone used	Crystal or moving coil microphone
Ballistocardiogram (BCG)	Frequency range: dc to 40 Hz	Infinite period platform with strain gauge accelerometer
Impedance cardiogram (Rheocardiography)	Frequency range: dc to 50 Hz Impedance range: 10 to 500 Ω Typical frequency employed for measuring impedance : 20 kHz to 50 kHz	Surface or needle electrodes
Oximetry	Frequency range: 0 to 60 Hz; 0 to 5 Hz usually adequate	Photoelectric pulse pick-up Photoelectric flow-through cuvette

Signals from Respiratory System

Parameter	*Primary signal characteristics*	*Transducer required*
Respiration rate	Normal range: 0 to 50 breaths/min	Thermistor Impedance pneumography electrodes Microswitch method CO_2 detectors Strain gauge transducer Doppler shift transducer
Pneumotachogram (respiratory flow rate)	Frequency range: dc to 50 Hz	Fleisch pneumotachograph BMR spirometers
Impedance pneumograh	Frequency range: dc to 30 Hz (from demodulated carrier) Typical carrier frequency used: 20 kHz to 50 kHz	Surface or needle electodes
Tidal volume (Volume/breath)	Frequency range: dc to 5 Hz Typical value for adult human: 600 ml/breath	Direct from spirometer Integrated from pneumotachogram
Minute ventilation (vol/min)	6 to 8 l/min	Integrated from pneumotachogram
Gases in expired air	CO_2 – normal range: 0 to 10% End tidal CO_2 (human) 4 to 6% N_2O – Range 0 to 100% Halothane – Range 0 to 3%	Infrared sensors Mass spectrometery

Signals from Respiratory System

Parameter	*Primary signal characteristics*	*Transducer required*
Diffusion of inspired gases (nitrogen wash-out technique)	Normal range of nitrogen concentration differential : 0 to 10%	Discharge tube nitrogen analyser
Pulmonary diffusing capacity (using carbon monoxide)	Normal range(human): 16 to 35 ml CO/mmHg/min	Intrared absorption by CO
Dissolved Gasses and pH		
pH	Signal range: 0 to ± 700 mV	Glass and calomel electrodes
Partial pressure of dissolved CO_2(Pco_2)	Range : 1 to 1000 mm Hg Normal signal range: 0 to ± 150 mV	Direct recording CO_2 electrode
Partial pressure of dissolved oxygen (pO_2)	Normal measurement range: 0 to 800 mm Hg Hyperbaric pO_2 range: 800 to 3000 mm Hg	Polarographic electrodes
Na^+, Cl^- Cations	Signal range: 60 mV/decade	Specific ion-sensitive electrodes

Physical Quantities

Parameter	*Primary signal characteristics*	*Transducer required*
Temperature	Frequency range: dc to 1 Hz	Thermocouples Electrical resistance thermometer Thermistor Silicon diode
Galvanic skin resistance (GSR)	Resistance range: 1 k to 500 kΩ	Surface electrodes similar to that of ECG electrodes
Plethysmogram (volume measurement)	Frequency range: dc to 30 Hz	Qualitative Plethysmography by: - photoelectric method - impedance method - piezoelectric method
Tocogram (uterine contrations measurement during labour)	Frequency range: dc to 5 Hz	Strain gauge transducers
Isometric force, dimensional change		Strain gauge (resistance or semiconductor

Displacement, Position and Motion Sensors

Resistive Potentiometer

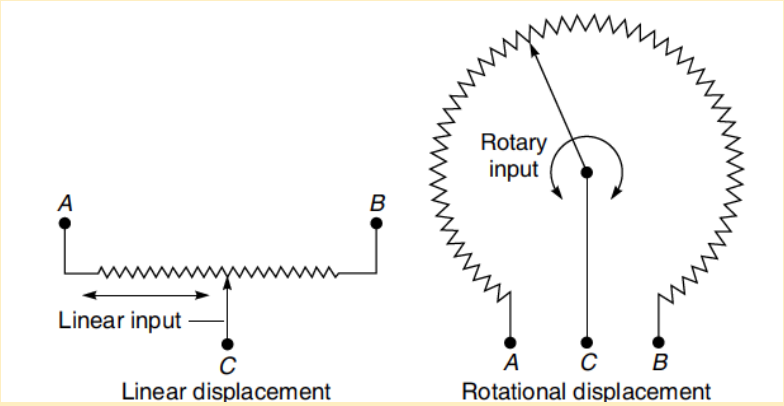

Strain Gage:
Linear output within 0.01 of full scale.
Continuous stepless conversion of resistance for < 10 Ohm.
Resolution depends on wire spacing > 20 μm.
Single, multiturn, linear, logarithmic versions.
Frictional and inertial components are be small for minimal dynamic distortion.

$$R = \frac{\rho L}{A}$$

$$\frac{\Delta R}{R} = \frac{\Delta L}{L} - \frac{\Delta A}{A} + \frac{\Delta \rho}{\rho}$$

Poisson's Ratio = Change in Diameter/Change in Length

$\mu = -\frac{\Delta D/D}{\Delta L/L}$

$$\frac{\Delta R}{R} = \underbrace{(1+2\mu)\frac{\Delta L}{L}}_{\substack{Dimensional \\ effect}} + \underbrace{\frac{\Delta \rho}{\rho}}_{\substack{Piezoresistive \\ effect}}$$

Gage Factor : $G = \frac{\Delta R/R}{\Delta L/L}$

Material	*Gauge factor*	*Temperature coefficient of resistance (W/W/°C)*
Constantan	2.0	2×10^{-6}
Platinum	6.1	3×10^{-3}
Nickel	12.1	6×10^{-3}
Silicon	120	6×10^{-3}

- Gage Factor must be high.
- Temperature Coefficent of Resistance must be low.
- Semiconductors are good but they need temperature compensation using thermistors and combinations of suitably chosen p-type or n-type gages.
- Selective doping allows for positive and negative resistance changes.

Unbonded Strain Gage

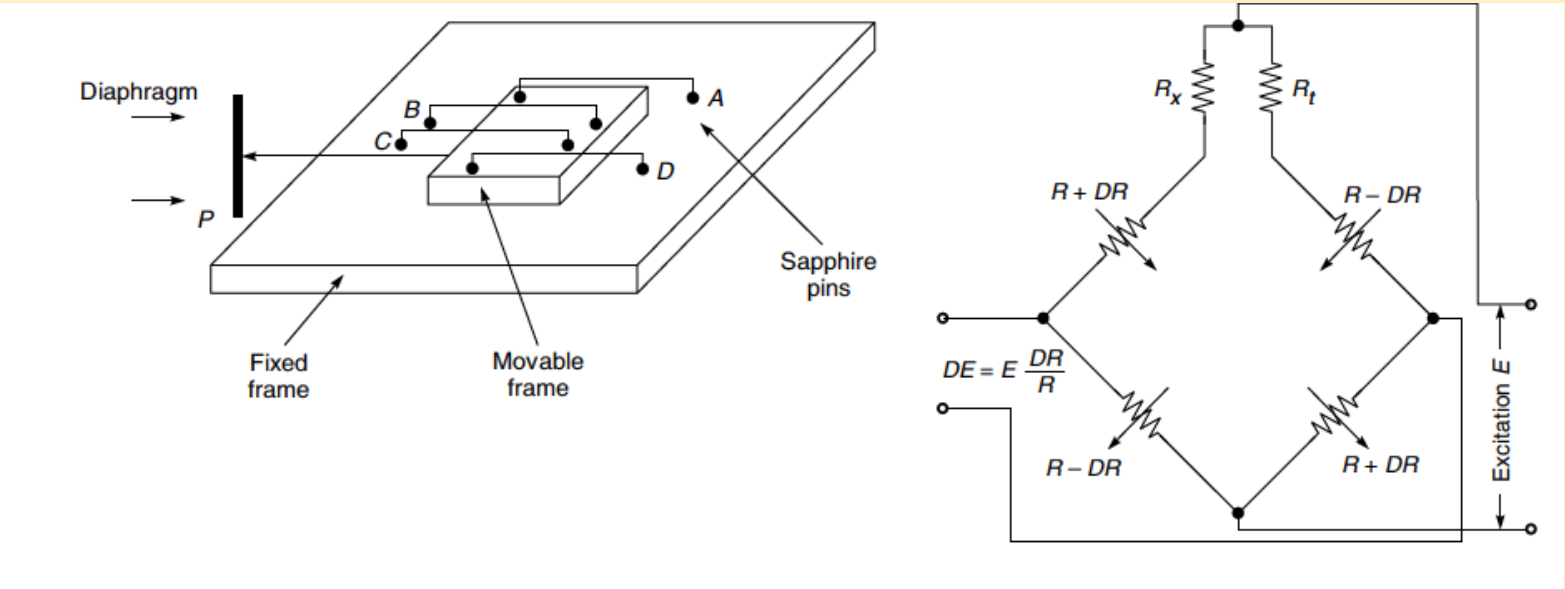

R_x : Resistor for zeroing the circuit due to inhomogeneous wire characteristics.
R_t : Resistor for zero point drift due to temperature changes.

Good for intravenous blood pressure measurements by mounting at the tip of a cardiac catheter.
Good for low pressure measurements since hysteresis errors are low.

Bonded Strain Gages

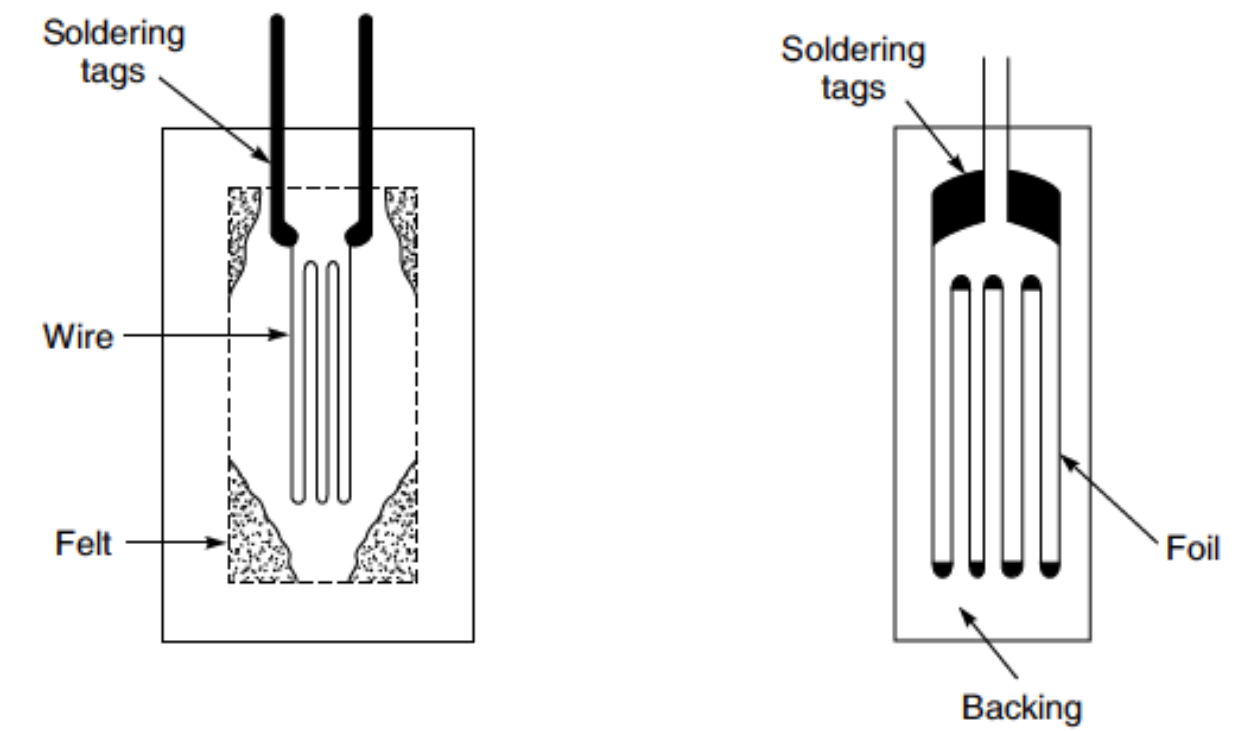

Strain due to pressure changes the resistance.
A second strain gage without any loading can be used for temperature compensation.

Silicon Bonded Strain Gages

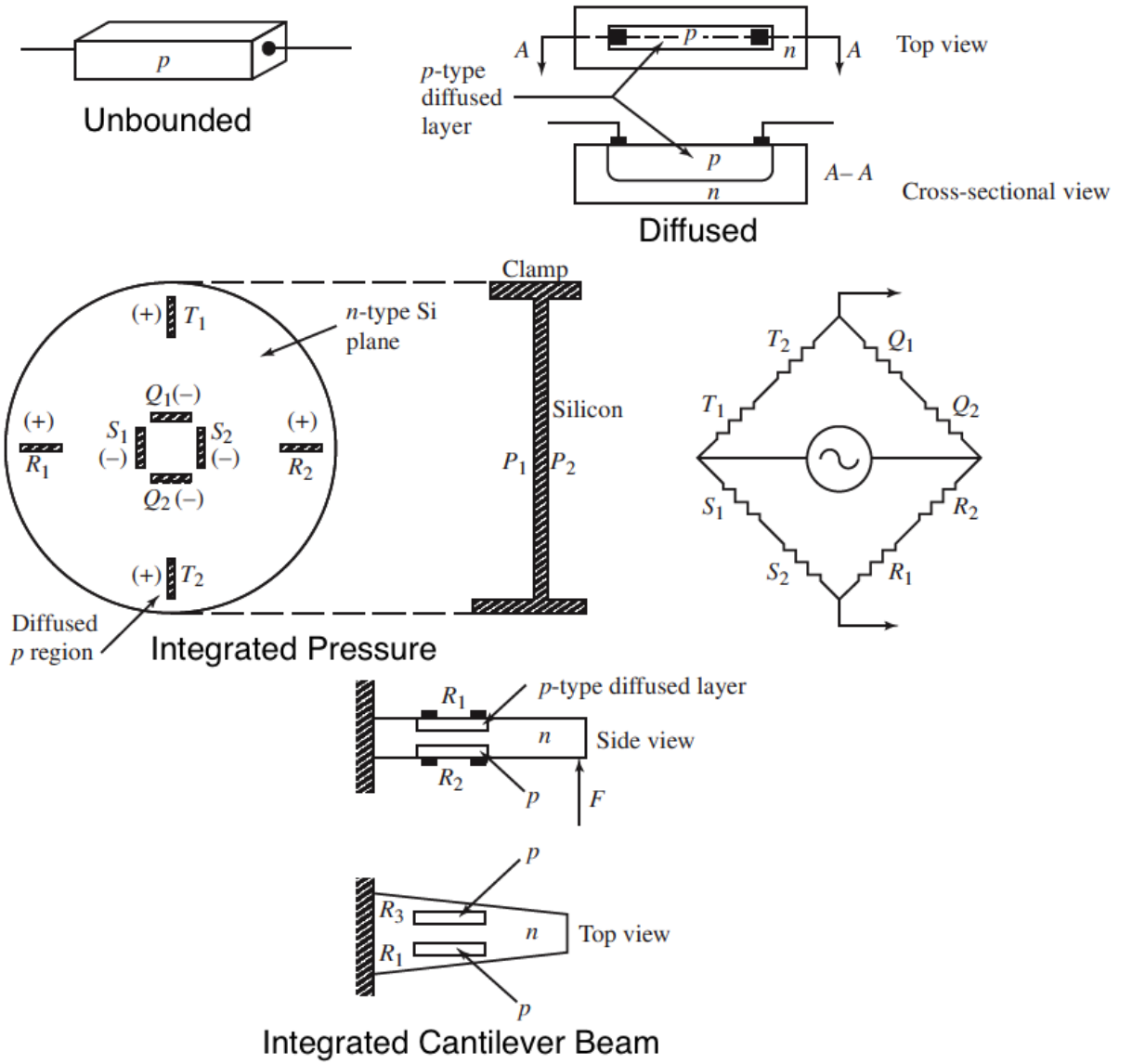

R_i and T_i : Radial Strain Components

S_i and Q_i : Tangential Strain Components

Variable Capacitance

Capacitive transducers are widely used in pressure transducers and accelerometers.

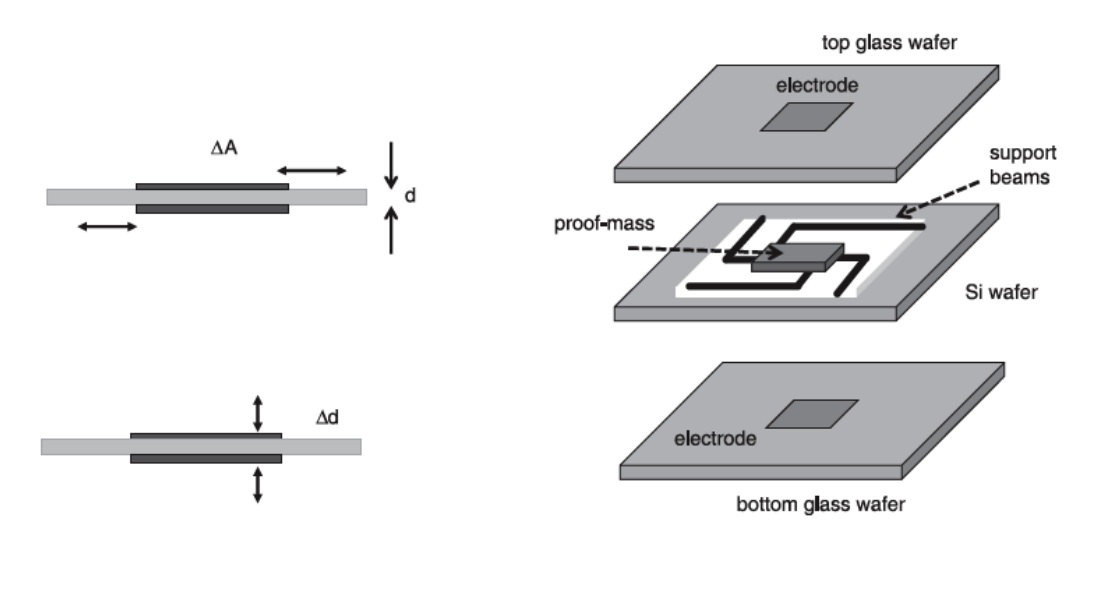

A change in capacitance via a change in parallel plates

- by their overlapping area ΔA by the horizontal motion of two plates.
- by their separation by the vertical motion.

Capacitance of paralel plate capacitor

$$C = \frac{\epsilon_r \epsilon_o A}{x}$$

ϵ_r : relative permittivity of the material between the plates
$\epsilon_0 = 8.85 \times 10^{-12} Fm^{-1}$: permittivity of the free space

Relative change in overlap area : $\frac{\delta C}{\Delta A} = \frac{\epsilon_0 \epsilon_r}{x}$

Relative change in distance : $-\frac{\epsilon_0 \epsilon_r}{x^2}$
Nonlinear but easier to be fabricated in a MEMS structure.

Application areas of capacitive pressure transducers

Intracranial pressure monitoring, intraocular pressure measurements, tips of different catheter types.

Application of Capacitive Sensors as Accelerometers in Pacemakers

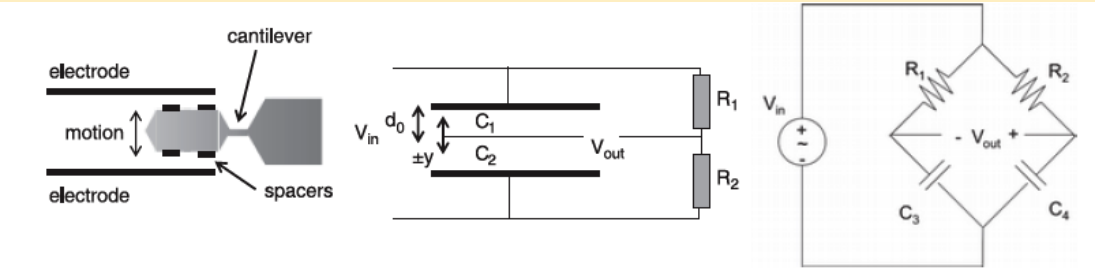

When the accelerometer is moved or tilted the cantilever moves up or down and changes the capacitance. This change is sensed by the bridge whose output determines the rate of the pacemaker.

$$\Delta C_1 = C\frac{\Delta y}{y}, \quad \Delta C_2 = -C\frac{\Delta y}{y}$$

$$V_{out} = \frac{V_{in}}{2y}\Delta y = -\frac{V_{in}}{2y}\frac{ma}{k}$$

m : mass of the cantilever

k : spring constant of the cantilever

Self Study Question

$C(y \pm \Delta y) \approx \frac{\epsilon_0 \epsilon_r A}{y} \pm \frac{d}{dy} \frac{\epsilon_0 \epsilon_r A}{y} \Delta y = C(y) \mp C(y) \frac{\Delta y}{y} \longrightarrow \pm \Delta C(y) = \mp C(y) \frac{\Delta y}{y}$

Using the half bridge with fixed impedances Z_1, Z_2 and variable impedances Z_3 and Z_4, we obtain

$V_{out} = V_{in} \left(\frac{Z_4}{Z_2 + Z_4} - \frac{Z_3}{Z_1 + Z_3} \right)$

If we assume that at equilibrium $Z = Z_1 = Z_2 = Z_3 = Z_4$ then

$V_{out} = V_{in} \frac{Z(Z_4 - Z_3)}{(Z + Z_3)(Z + Z_4)}$

Also $Z + Z_3 = Z + Z + \Delta Z \approx 2Z$ and $Z + Z_4 = Z + Z - \Delta Z \approx 2Z$

$= V_{in} \frac{1}{4Z} (Z_4 - Z_3)$

$Z_4 - Z_3 = \frac{1}{s(C - \Delta C)} - \frac{1}{s(C + \Delta C)} = \frac{2s\Delta C}{s(C - \Delta C)s(C + \Delta C)} \approx \frac{2\Delta C}{sC^2} = \frac{-2}{sC} \frac{\Delta y}{y} = -\frac{2Z\Delta y}{y}$

$V_{out} = -V_{in} \frac{\Delta y}{2y}$

Sensitivity of Capacitive Sensors

$$C = \frac{\epsilon_r \epsilon_o A}{x}$$

$$K = \frac{\Delta C}{\Delta x} = -\frac{\epsilon_r \epsilon_o A}{x^2} = -\frac{C}{x}$$

or

$$\frac{dC}{C} = -\frac{dx}{x}$$

Capacitance Microphone

DC excited, no current when $x = 0$
Δx produces a voltage $v_o = v_1 - E$
$V_o(j\omega) = \frac{(E/x)j\omega\tau}{1+j\omega\tau}\Delta X(j\omega)$
$\tau = RC = R\frac{\epsilon_r \epsilon_o A}{x}$
High pass filter stops low frequency sound waves and passes those > 20Hz

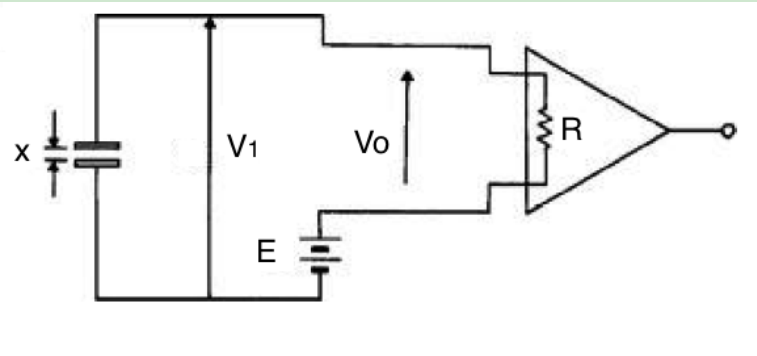

Since the initial capacitor voltage is E, the charge is $Q = EC$.
Let ΔC is a step change in capacitor then capacitor voltage :
$V_C = \frac{Q}{C+\Delta C}$
The corresponding instantaneous change in capacitor voltage :
$\Delta V_C(0) = V_C - E = \frac{EC}{C+\Delta C} - E = -E\frac{\Delta C}{C+\Delta C} \approx -E\frac{\Delta C}{C}$

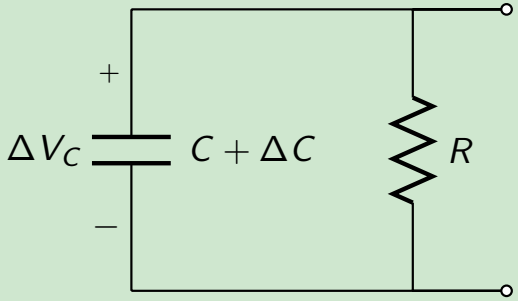

$(C + \Delta C)\frac{d}{dt}\Delta V_C(t)R = \Delta V_C(t)$
$\tau = R(C + \Delta C) \approx RC$
$\frac{d}{dt}\Delta V_C(t) = \Delta V_C(t)/RC$
$\Delta V_C(0) = -E\frac{\Delta C}{C}$

$\Delta V_C(t) = -E\frac{\Delta C}{C}e^{-t/RC}u(t) \longrightarrow \Delta V_C(s) = -E\frac{\Delta C}{C}\frac{1}{s+1/RC}$
Since $\Delta V_C(t)$ is the step response of the system,
the impulse response will be $\Delta V_C(s) = -E\frac{\Delta C}{C}\frac{s}{s+1/RC}$
Since $\frac{\Delta C(t)}{C} = -\frac{\Delta x(t)}{x} \longrightarrow \frac{\Delta C(s)}{C} = -\frac{\Delta X(s)}{x}$
The transfer function : $\Delta V_C(s) = \frac{E}{x}\frac{s\tau}{1+s\tau}\Delta X(s)$

Inductive Transducers

$$L = n^2 G \mu$$

Parameters whch can be changed by mechanical means:
L : Conductance of coil
G : Geometric form factor
μ : effective permeability of the medium

Linear Variable Differential Transformer (LVDT)

Primary coil: excited with oscillator
Output voltage : Difference of voltages on secondary coils
It is (+) when going one direction and (-) when in the other.
The phase between input and output changes from 0 to 180^0 when direction is changed.
Phase sensitive demodulator senses direction.
Sensitivity :0.5-2.0 mV per 0.01mm/Volt
Full scale displacement :0.001-25cm with linearity $\pm 0.25\%$

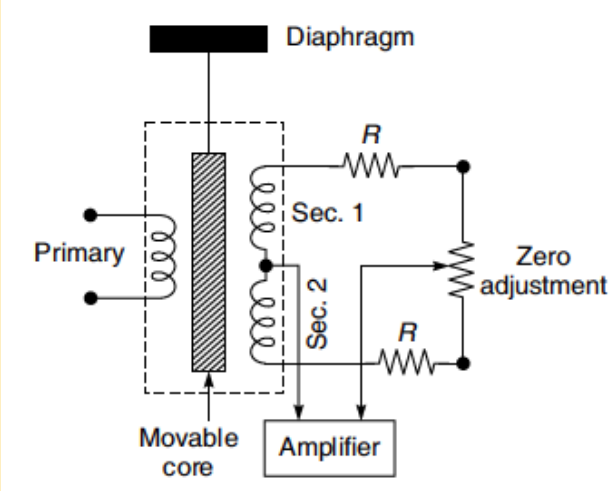

Phase Sensitive Demodulator Senses the Phase Direction

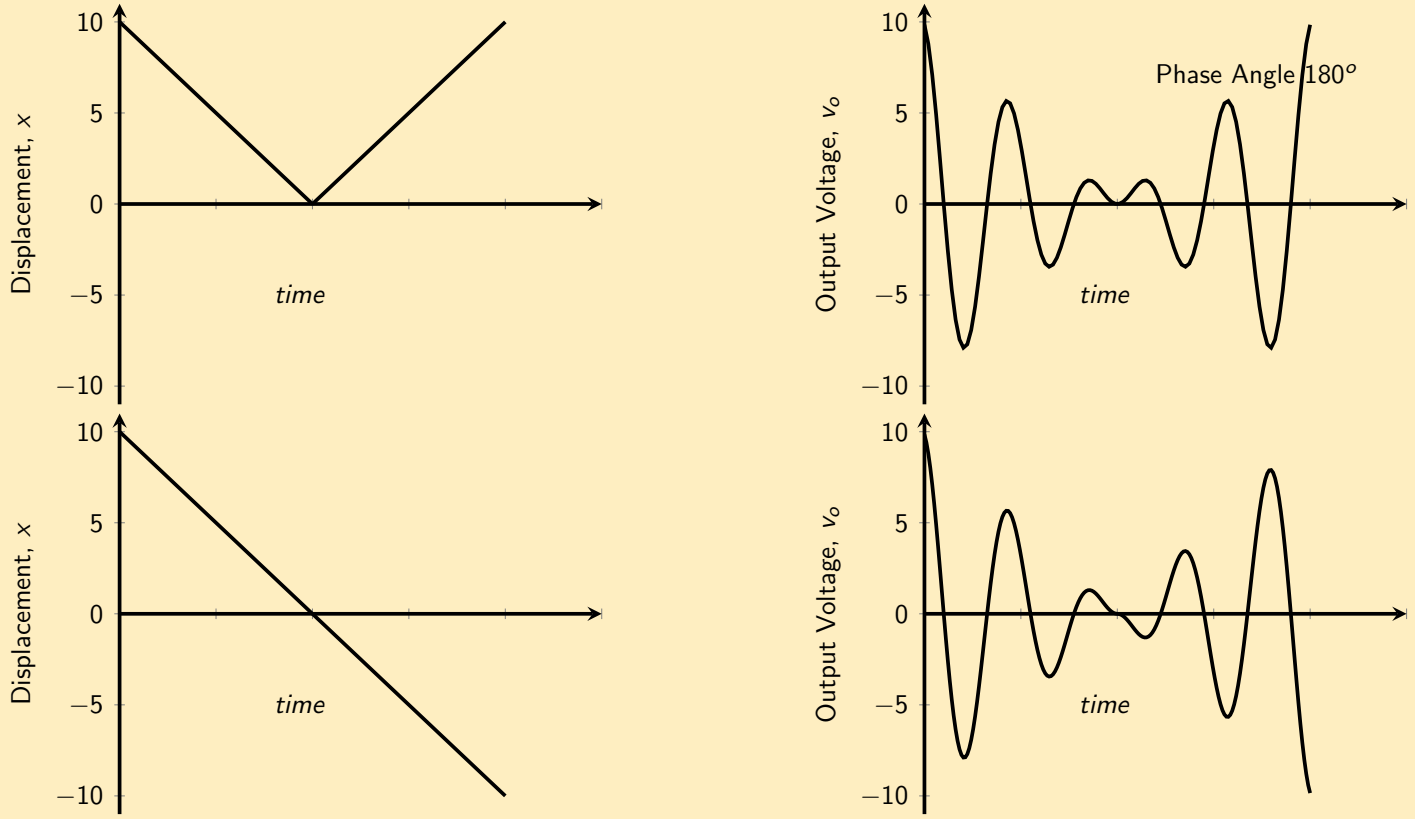

Piezoelectric Transducers

Mechanical Deformation $\leftrightarrow$ Electrical Charge Movement

$$Q = Fd$$

d: piezoelectric constant
F: Applied Force
Capacitor Model : Voltage across plates $E_0 = \frac{Q}{C} = \frac{Fd}{C}$

$$C = \frac{\epsilon_r \epsilon_0 A}{x}$$

$$E_0 = \frac{Fdx}{\epsilon_r \epsilon_0 A} == gPx$$

$g = \frac{d}{\epsilon_r \epsilon_0}$: voltage sensitivity in volts
$P = \frac{F}{A}$: Pressure acting on the crystal

Areas of Use for Piezoelectric Sensors

- Ultrasonic scanners for imaging and blood pressure measurements
- Detection of Korotkoff sound in blood pressure measurements

Analogies for Electro-mechanical System

Electrical Units	**Mechanical Units**
Current	Velocity
Charge	Displacement
Capacitance	Compliance
Inductance	Mass
Impedance	Mechanical impedance

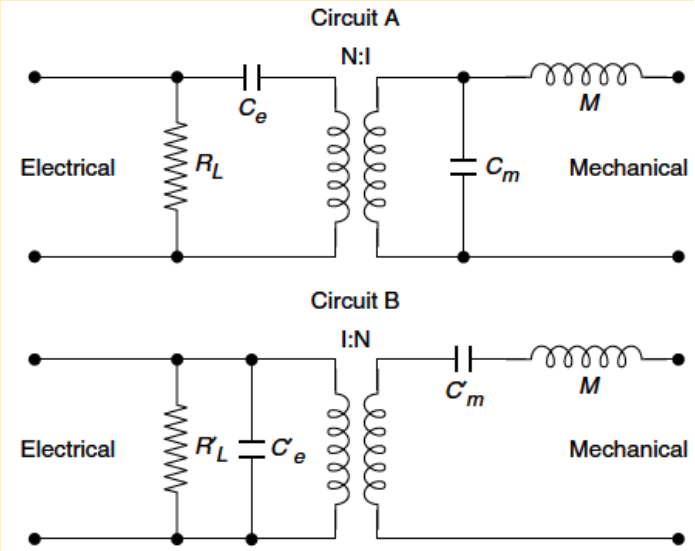

A piezoelectric sensor $C = 500pF$. The sensor leakage resistance is 10 GΩ. The amplifier input impedance is 5 MΩ. What is the low corner frequency?

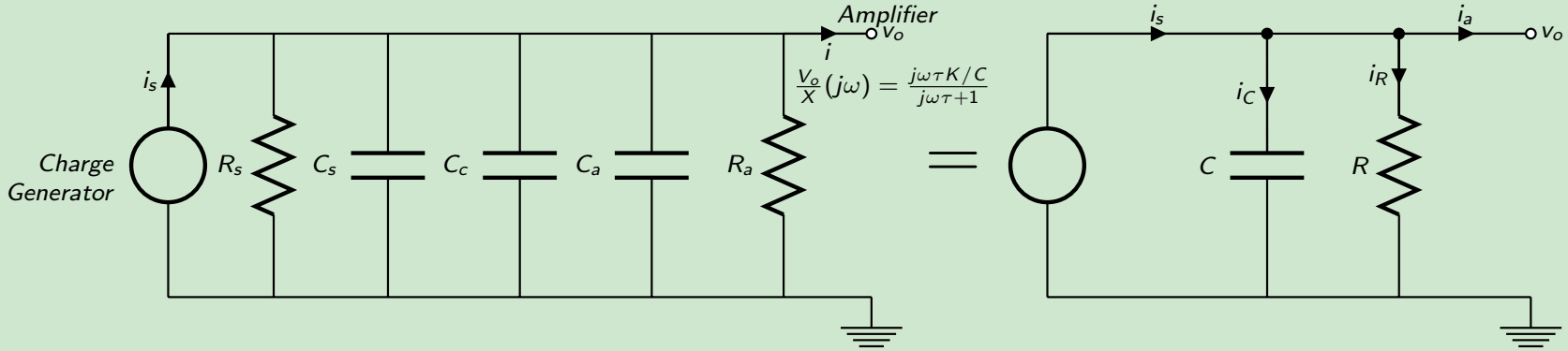

C_s : Sensor Capacitance, C_c: Cable Capacitance, C_a: Amplifier Capacitance

$$f_C = \frac{1}{2\pi RC} = \frac{1}{2\pi(5 \times 10^6)(500 \times 10^{12})} = 64Hz$$

Increasing the input impedance of the amplifier by a factor of 100, we can lower the low-corner frequency to 0.64 Hz.

Pressure Transducers

- Capacitance manometer - in which the diaphragm forms one plate of a capacitor.
- Differential transformer - where the diaphragm is attached to the core of a differential transformer.
- Strain gauge - where the strain gauge bridge is attached to the diaphragm.

The transducer must have a uniform frequency response at least up to the 20th harmonic of the fundamental frequency of the signal. For blood pressure recording (*i.e.* 72 bpm or 1.2 Hz), the system should have a linear frequency response at least up to 30 Hz. Displacement transducers can be converted into pressure transducers by attaching a diaphragm upon which a pressure is applied.

Temperature Transducers

- Thermocouple
- Electrical Resistance Thermometer
- Thermistor
- Radiation Thermometery
- Silicon Diode

Common Type of Temperature Transducers

Thermocouple	**RTD**	**Thermistor**	**Semiconductor**
Range: -184°C to +2300°C	Range: -200°C to +850°C	Range: 0°C to +100°C	Range: -55°C to +150°C
High Accuracy and Repeatability	Fair Linearity	Poor Linearity	Linearity: 1°C and Accuracy: 1°C
Needs Cold Junction Compensation	Requires Excitation	Requires Excitation	Requires Excitation
Low-Voltage Output	Low Cost	High Sensitivity	10mV/K, 20mV/K, or 1A/K Typical Output

Except for semiconductor (IC) sensors, all sensors have nonlinear transfer functions.
In the past, complex analog conditioning circuits were designed to correct for the sensor non-linearity. These circuits often required manual calibration and precision resistors to achieve the desired accuracy.
Today, however, sensor outputs may be digitized directly by high resolution ADCs. Linearization and calibration is then performed digitally, thereby reducing cost and complexity.

Thermocouple

When two wires of different materials are joined together at either end, forming two junctions which are maintained at different temperatures, a thermo-electromotive force (emf) is generated. This arrangement is called a thermocouple.

$$E = aT + \frac{1}{2}bT^2 + \cdots$$

E: Seeback voltage, T: Temperature in ^{o}C

Reference junction at 0^oC.

Thermoelectric sensitivity $\alpha = \frac{dE}{dT} = a + bT + \cdots$

Thermocouple

Advantages	**Disadvantages**
Fast response time $<$ 1ms	Low sensitivity 6.5-80 μV/C^o
Small size $<$ 12 μm diameter	Need for a reference temperature
Ease of fabrication	Cold junction usually kept at 0°C
Long term stability	Small output voltage
Good Accuracy $<$0.01C^o	
Good Range -150 to $+$1500	

Used in patient monitoring, and can be inserted into catheter systems, hypodermic needles.

Small size and very fast response make them suitable for intracellular transient temperature measurements and measuring temperatures from within the body at sites like the oesophagus, rectum, etc.

Reference Temperature Compensator for Thermocouple

For medical applications, a copper-constantan combination is usually preferred with reference junction at 0^oC and the other at 37.5^oC, whose output is 1.5 mV.

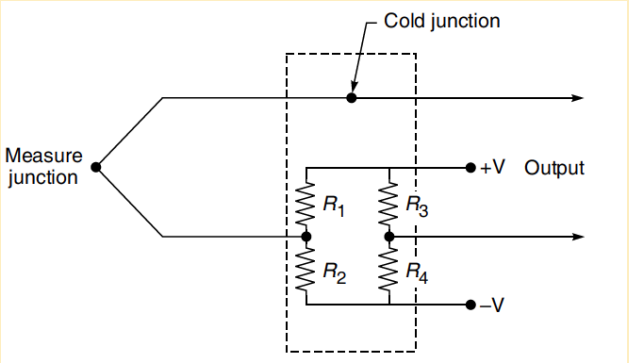

R_2 is a temperature-sensitive component, thermally bonded to the cold junction thermocouple.
The resistance-temperature curve of R_2 matches the emf temperature characteristic of the thermocoupled material.
The voltage change across R_2 nullifies the cold junction thermal voltage over a limited ambient temperature range ($\pm 5^o$C) providing effective reference temperature stability of ($\pm 0.2^o$C).

Dedicated thermocouple signal conditioner: AD594/AD595

Provides high level (10mV/^{o}C) output directly from the thermocouple signal.
Includes a thermocouple failure alarm.
Powered from a single-ended supply with negative voltage temperatures below 0°C can be measured.
Minimizes self-heating by operating with a supply current of 160μA, but is also capable of delivering $\pm$5mA to a load.
The temperature transducer voltages and gain control resistors are available at the package pins for recalibration by resistors for other thermocouple types .
Two performance grades: Version C with $\pm$1°C and A $\pm$3°C calibration accuracies to be used with cold junctions between 0 to +50°C.

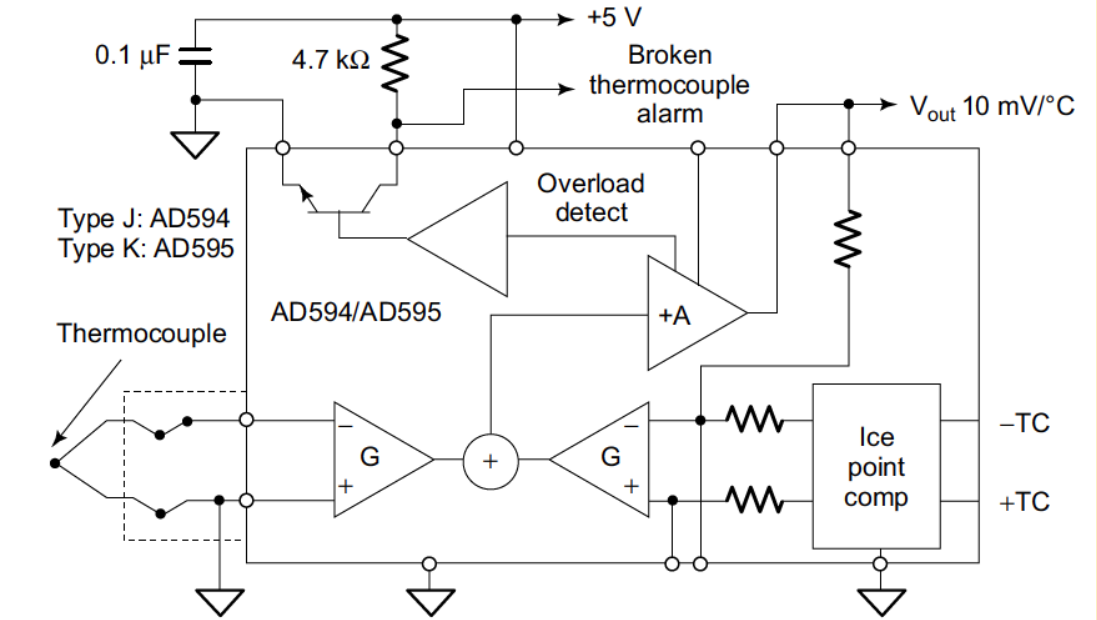

Electrical Resistance Thermometer

The temperature dependence of resistance of certain metals makes it convenient to construct a temperature transducer.

$$R_t = R_0(1 + \alpha T)$$

R_0 : resistance at 0^oC , α: temperature coefficient of resistivity, T: temperature
The increase in resistance is linear over the range 0-100°C.

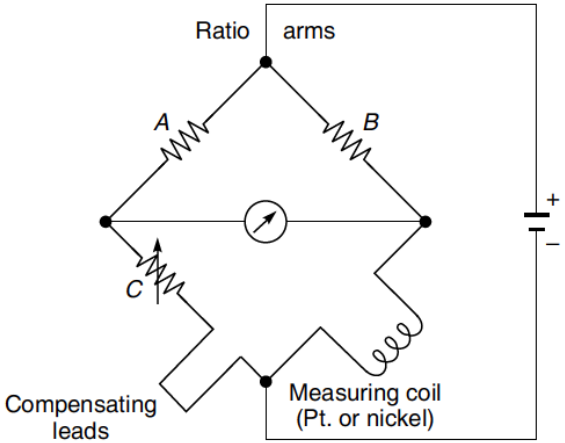

The coefficient of resistivity α for platinum is 0.004 W/W ^{o}C.
A and B are fixed resistances. C is a variable resistance made from constantan with very low α.
Changes in resistance of the coil leads with ambient temperature are cancelled out by the corresponding changes in the dummy or compensating leads.
Platinum resistance sensors are linear within $\pm$10% between -200 and +600°C.

Thermistor

Semiconductor materials whose resistance decrease with increasing temperature.
The resistance-temperature relation for a thermistor

$$R_T = R_0 e^{\beta(T_0 - T)/TT_0}$$

R_T: Resistance of the thermistor in Ω
T: Absolute temperature in K
$T0$: Standard reference temperature in K
β: material constant for thermistor in K
Temperature coefficient $\alpha = \frac{1}{R_T}\frac{dR_T}{dT} = -\frac{\beta}{T2}(\%/K)$

Advantages

Small size $<$ 0.5mm in diameter
High sensitivity: -3 to -5% per C^o
High resistance so that no need for compensation for connecting leads
Small time constants because of reduced mass so that measurements can be quick
Small size like about a pin head making them mountable on a catheter
Large range of resistors making them easier to match in circuits

Disadvantages

Limited linearity
Nonlinear behavior due to increased heating

Linearization of Thermistors over a Limited Temperature Range

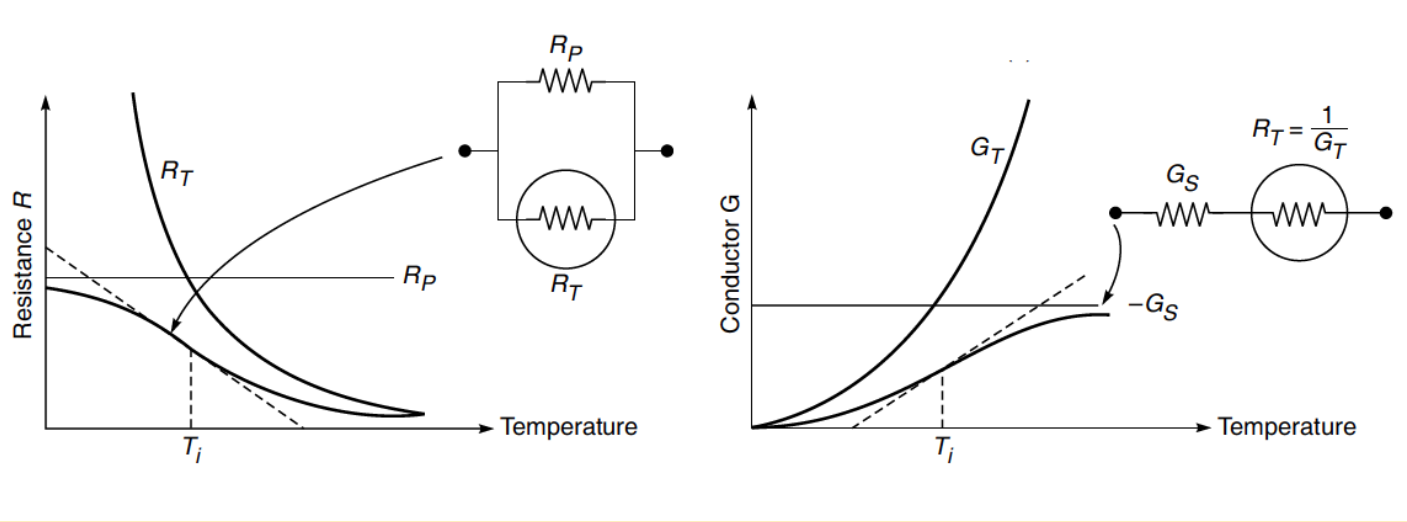

If the thermistor is supplied with a constant current and the voltage across the thermistor is used to indicate the temperature, linearization can be obtained by shunting the thermistor with a selected resistor R_p.
If the thermistor is supplied with a constant voltage and the current is used to indicate the temperature, linearization can be obtained by a series arrangement.
The objective is to make the point of inflection of the parallel combination coincide with the mid-scale temperature.
Maximum deviation from linearity observed is 0.03^oC for every 10^oC.
Improved linearity results in a decrease in the effective temperature coefficient.

Radiation Thermometery

Any material placed above absolute zero temperature emits electromagnetic radiation from its surface.
Both the amplitude and frequency of the emitted radiation depends on the temperature of the object.
Infrared thermometers measure the magnitude of infrared power (flux) in a broad spectral range, typically from 4 to 14 micrometers.
A pyroelectric sensor develops an electric charge that is a function of its temperature gradient.
The charge creates a current which can be accurately measured and related to the temperature of the tympanic membrane.

	Resistance Thermometer	**Thermistor**	**Thermocouple**	**Radiation**
Accuracy	0.01 to 0.1 ^oF	0.01^o to 1^oF	1° to 10^oF	0.2^oF
Stability	Less than 0.1% drift in 5 years	0.2^oF drift/year	1° F drift/year	Same as thermocouple
Sensitivity	0.1 to 10 $\Omega/^oF$	50 to 500	50 to 500 volts/^oF	Same as Thermocouple
Features	Greatest accuracy over wide spans; greatest stability	Greatest sensitivity	Greatest economy highest range easiest to use	Fastest response no contaminations

The circuit is designed to monitor body temperature in the range of 34-40°C with an accuracy of 2.5%.
The temperature-sensing diode D_1 is connected to the non-inverting input of an operational amplifier.
The gain of the amplifier is 500. With D_1 mounted in a water bath at 37°C, R_1 is adjusted to give an amplifier output voltage of zero.
Using a centre zero meter, the scale can be calibrated to $\pm 3^o$C.

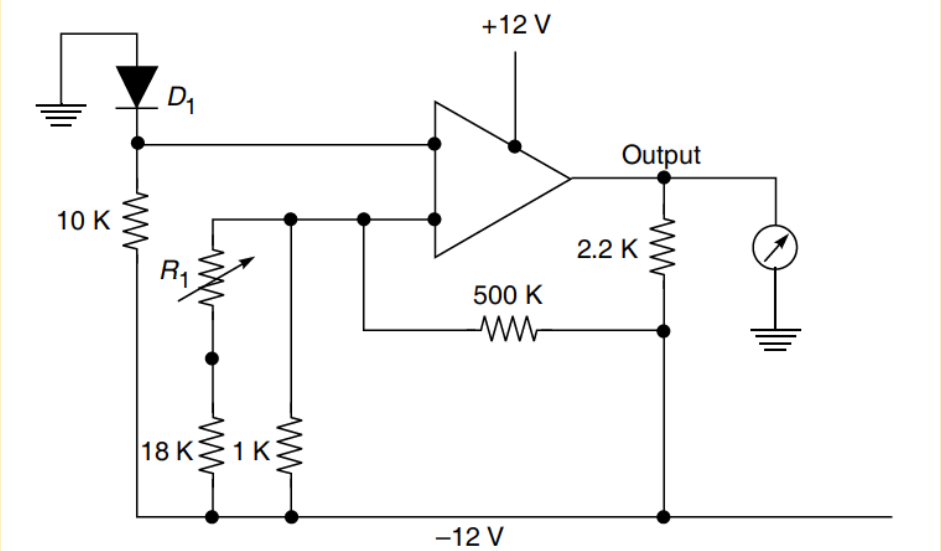

Modern semiconductor temperature sensors offer high accuracy and high linearity over an operating range of about 55C^{o}to $+150^o$C.
Internal amplifiers can scale the output to convenient values, such as 10mV/^{o}C.

Photoelectric Transducers

Photoelectric transducers are based on the principle of conversion of light energy into electrical energy.
Radiation falling on a photosensitive element electrical current to be measured.
There are two types of photoelectric cells.

- **Photovoltaic or Barrier Layer Cells**
  Robust in construction,
  No need for external electrical supply,
  Stronger photocurrent as high as 120μA/lumen,
  Linear relationship with the incident light intensity,
  Low internal resistance,
  A high temperature coefficient making it necessary to warm up before reading,
  Slow to respond immediate changes so they not suitable where mechanical choppers.

- **Photoemissive Cells**
  - High Vacuum Photoemissive Cells
    When a beam of light falls on the surface of the cathode, electrons are released from it, which are drawn towards the anode which is maintained at a certain positive potential. This gives rise to a photocurrent which can be measured in the external circuit. Load resistances as high as 10,000 MΩ have been used.
    It is not desirable to apply very high voltages, as they would result in a excessive dark current without any gain in response.

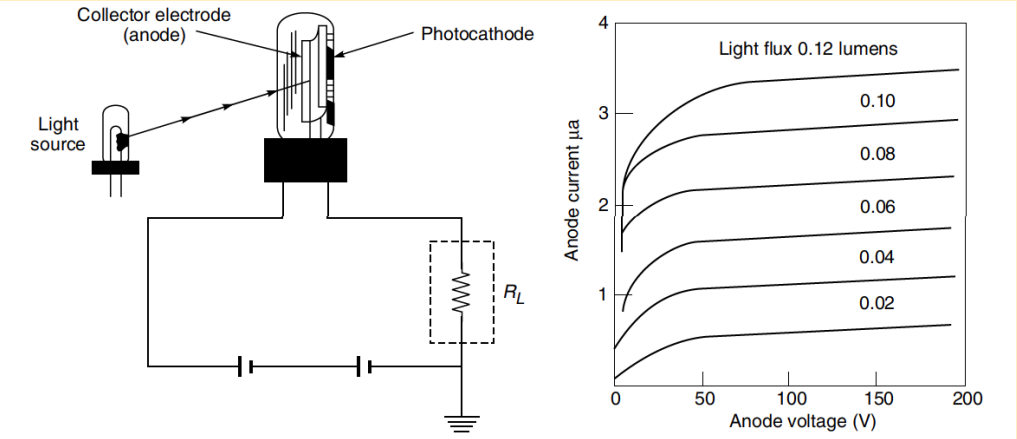

- **Photomultiplier Tubes**
  Photomultiplier tubes are used as detectors when it is required to detect very weak light intensities.
  The output of the photomultiplier tube is limited to an anode current of a few milliamperes.
  They are not uniformly sensitive over the whole spectrum and covering a range from 185 to 850 nm.
  They are fast in response that they are used in scintillation counters, where light pulses with duration of $10^{-9}s$ are encountered.
  A direct current power supply is required to operate a photomultiplier, the stability of which must be at least one order of magnitude better than the desired precision of measurement.

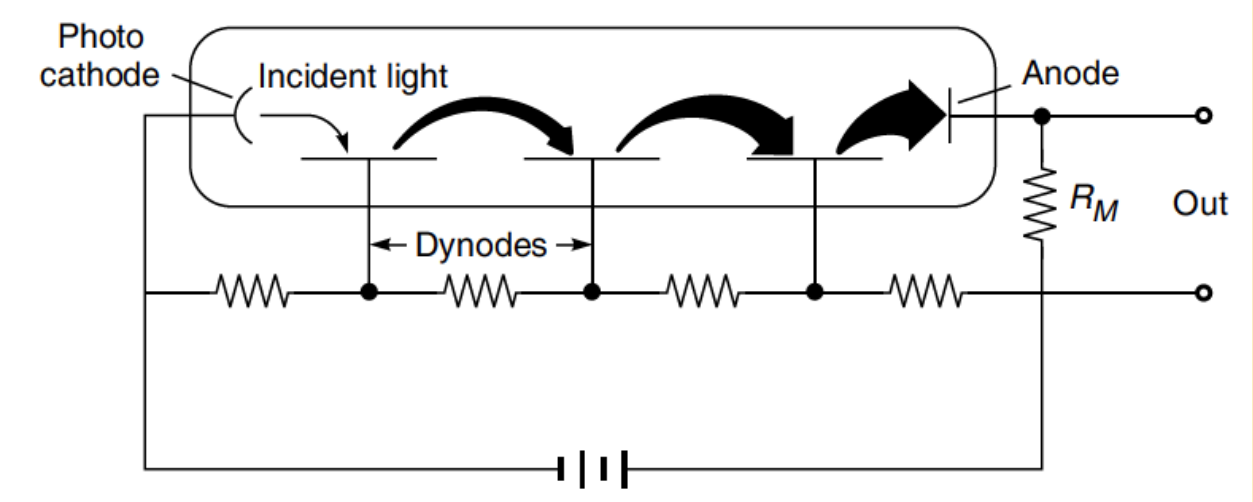

Optical Fibre Sensors

Measuring chemical substances in blood or other tissues.
Imaging via endoscopy.
Measuring pressure, temperature and displacement.

Advantages	**Disadvantages**
Free from electrical interference	Must be optically isolated
Immune from cross-talk	from ambient light
Mechanically flexible	Immobilized indicators for
Suitable for telemetry applications	chemical measurements have
Measuring multiple substances	short term stability
in a single sensor	Commercial accesories
Low cost and disposable	not optimal yet

Fiber Optic Sensor System

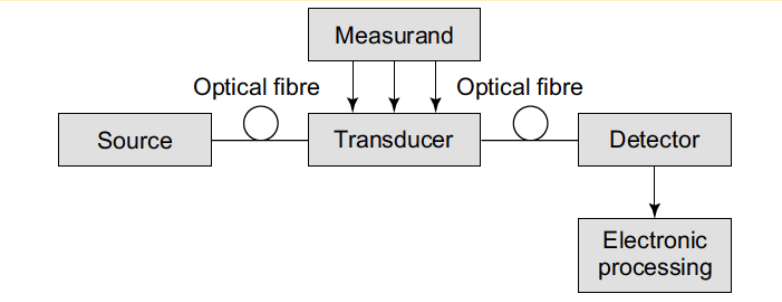

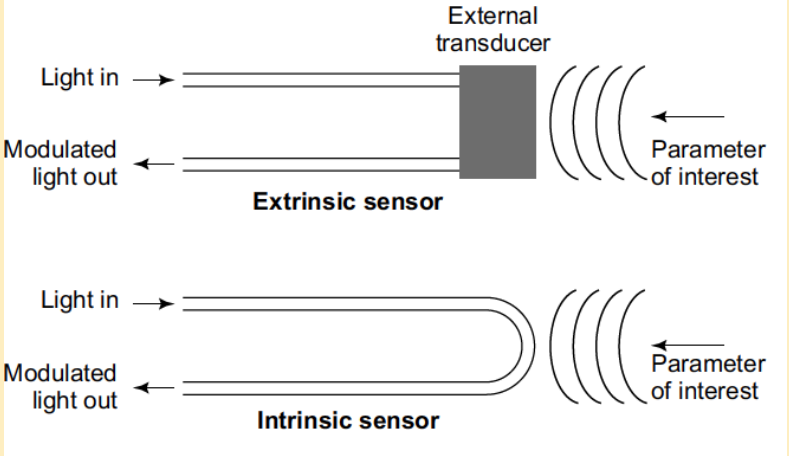

- Amplitude sensors :
  Oximetry to measure oxygen saturation in blood. Dye densitometry to measure blood flow and cardicac output. Fluorometry to measure metabolic state of tissue.
- Frequency sensors :
  Laser Doppler velocimetry.
- Temperature sensors : liquid crystals changing their refractive properties.
- Pressure sensors : deflection of cantilever mirrors.
- Spectroscopic sensors : chemicals changing their spectral characteristics.
- Chemical sensors : reagents interacting with chemical substance and changing their absorbance, luminance or reflectance.

Self SStudy Question: The Linearity Error of the Quarter Bridge

For a Wheatsone bridge shown below with strain gages $R_1 = R_2 = R_3 = R_4$,

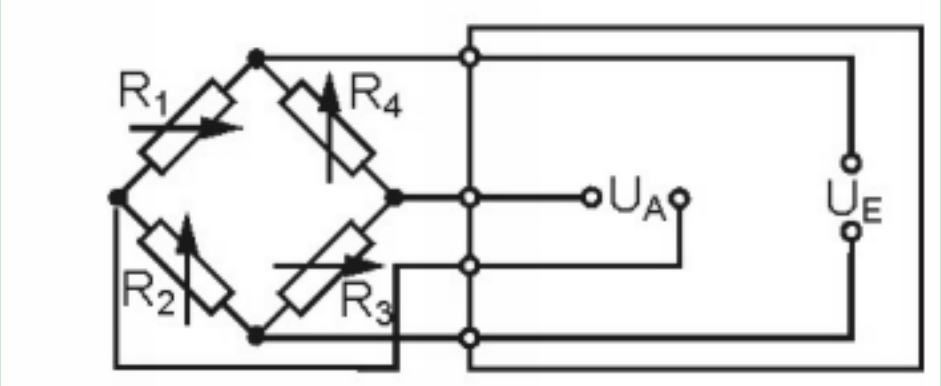

1. Show that

$$\frac{U_A}{U_E} = \frac{R_1}{R_1 + R_2} - \frac{R_4}{R_3 + R_4}$$

2 If the resistors have a small variation of ΔR_i, show that

$$\Delta \frac{U_A}{U_E} = \frac{1}{4}\left(\frac{\Delta R_1}{R_1} - \frac{\Delta R_2}{R_2} + \frac{\Delta R_3}{R_3} - \frac{\Delta R_4}{R_4}\right)$$

Hint: Assuming that the resistors are all equal i.e. $R_1 = R_2 = R_3 = R_4 = R$, but their variations ΔR_i are different, you may use Taylor expansion of $\frac{U_A}{U_E} = F(\mathbf{R})$ around $\mathbf{R} + \Delta\mathbf{R}$ as

$$F(\mathbf{R} + \Delta\mathbf{R}) \approx F(\mathbf{R}) + \sum_{i=1}^{4} \frac{\partial F}{\partial R_i} \Delta R_i$$

where $\mathbf{R} = [R\ R\ R\ R]^T$ and $\mathbf{\Delta R} = [\Delta R_1\ \Delta R_2\ \Delta R_3\ \Delta R_4]^T$.

3 Show that the relative linearity error is $E_{relL} = \frac{\Delta \frac{U_A}{U_E} - \Delta \frac{U_A^*}{U_E}}{\Delta \frac{U_A}{U_E}} = \frac{\Delta R}{2R + \Delta R}$

($\Delta \frac{U_A^*}{U_E}$ is the ratio of the output to the input due to a resistance change of ΔR_1 in strain gage R_1, other resistors being unchanged).
Hint: Assume that $R_1 = R_2 = R_3 = R_4 = R$ and only R_1 has a variation of ΔR_1 and determine the tangent through zero $\Delta \frac{U_A}{U_E} = \frac{\Delta R_1}{4R}$, and $\frac{U_A^*}{U_E} = \frac{\Delta R_1}{2(2R + \Delta R_1)}$.

Self Study Question: Determine the sensitivity of voltage divider structure with a single strain gauge.

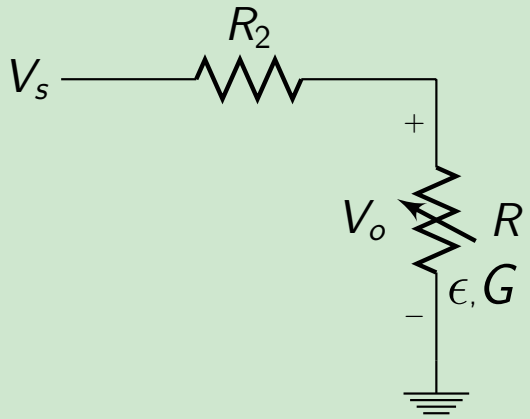

$$V_o = \frac{R_1}{R_1+R_2} V_s$$
$$dV_o = \left(\frac{dR_1}{R_1+R_2} - \frac{R_1 dR_1}{(R_1+R_2)^2} \right) V_s$$
$$dV_o = \frac{R_2 dR_1}{(R_1+R_2)^2} V_s \text{ where } dR_1 = G\epsilon R_1$$
$$dV_o = \frac{R_1 R_2}{(R_1+R_2)^2} G\epsilon V_s$$
$$\text{Sensitivity : } \frac{dV_o}{\epsilon} = \frac{R_1 R_2}{(R_1+R_2)^2} G V_s$$

What is the value of R_2 that maximizes sensitivity?

$$\frac{d}{dR_1} \frac{dV_o}{\epsilon} = \left(\frac{R_2}{(R_1+R_2)^2} - 2\frac{R_1 R_2}{(R_1+R_2)^3} \right) \epsilon G = 0 \longrightarrow R_1 = R_2$$

What is the dependence of sensitivity to temperature coefficient if R_1 and R_2 have the same temperature coefficient of α?

$R_1(\alpha) = (1 + \alpha \Delta T) R_1$ and $R_2(\alpha) = (1 + \alpha \Delta T) R_2$

$$\frac{dV_o}{\epsilon} = \frac{(1+\alpha\Delta T)^2}{(1+\alpha\Delta T)^2} \frac{R_1 R_2}{(R_1+R_2)^2} G V_s$$

Sensitivity is temperature compensated.

Self Study Question

A strain gauge is used as a uniaxial stress transducer as shown. The strain gauge is subjected to tensile stress, and the current through the strain gauge is measured at constant voltage. Assume that the strain gauge has nominal resistance $R_G = 10k\Omega$, gauge factor $G = 50$, and Young's modulus $E = 10kPa$.

• Find the sensitivity $\Delta I/\sigma$ where ΔI is the change in output current in units A, and σ is the stress in units Pa.

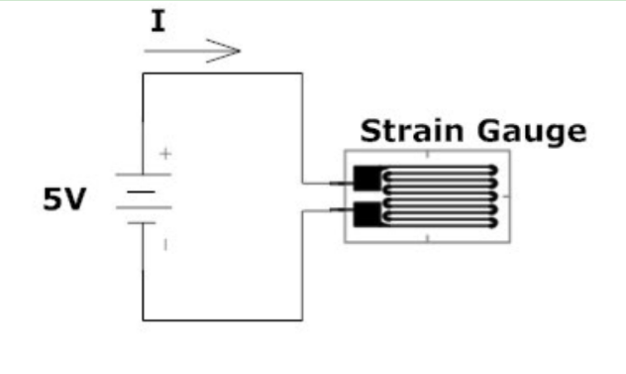

$$\frac{\Delta R_G}{R_G} = G \cdot \epsilon = G \cdot \frac{\sigma}{E}$$
$$\Delta I = 5V \cdot \Delta \frac{1}{R_G} = -5V \cdot \frac{\Delta R_G}{R_G^2}$$
$$\Delta I = -5V \cdot \frac{1}{R_G} \cdot \frac{\sigma}{E} \longrightarrow \frac{\Delta I}{\sigma} = -5V \cdot \frac{G}{R_G E}$$
$$= -2.5 \cdot 10^{-6} \frac{A}{Pa}$$

• Find the output current I for $\sigma = 0$ and $10Pa$.

When $\sigma = 0$ $I = \frac{5V}{R_G} = \frac{5V}{10k\Omega} = 0.5mA$.

When $\sigma = 10Pa$ $\Delta I = -2.5 \cdot 10^{-6} \frac{A}{Pa} \cdot 10Pa = -25\mu A$.

$I \longrightarrow I + \Delta I = 0.5 - 0.025 = 0.475mA$

Self Study Question: Determine the sensitivity of bridge with strain gauge.

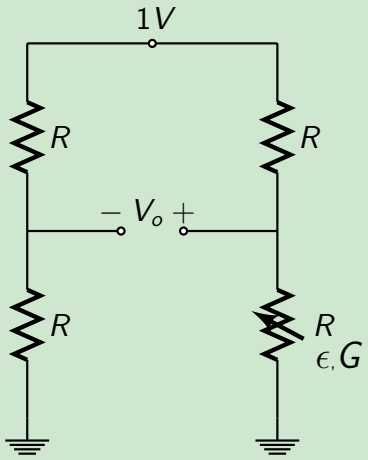

$$\frac{V_o}{\epsilon} = \frac{1}{4} G \cdot 1$$

Lowest Sensitivity
no T compensation

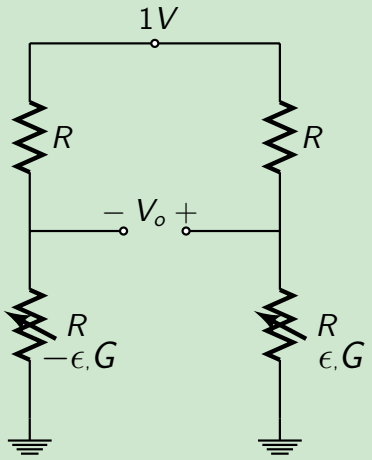

$$\frac{V_o}{\epsilon} = \frac{1}{2} G \cdot 1$$

Medium Sensitivity
T compensation

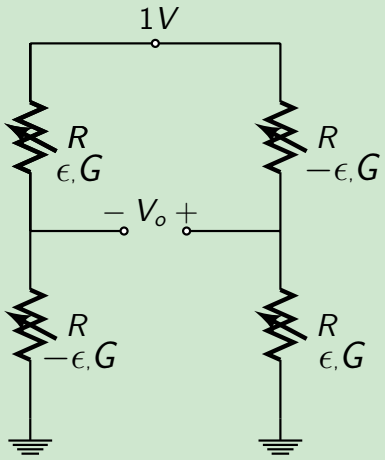

$$\frac{V_o}{\epsilon} = G \cdot 1$$

Highest Sensitivity
T compensation

Self Study Question:

Consider the stress transducer below, with constant supply voltage Vs =5 V, and four strain gauges R_1, R_2, R_3 and R_4 all with identical nominal resistance $R_{nom} = 10k\Omega$, gauge factor $G = 20$, and Young's modulus $E = \frac{\sigma}{\epsilon} = 100kPa$. The transducer produces a differential output voltage V_o in response to stress σ applied to two of the strain gauges R_1 and R_4, whereas the other two gauges R_2 and R_3 are not subjected to any stress.

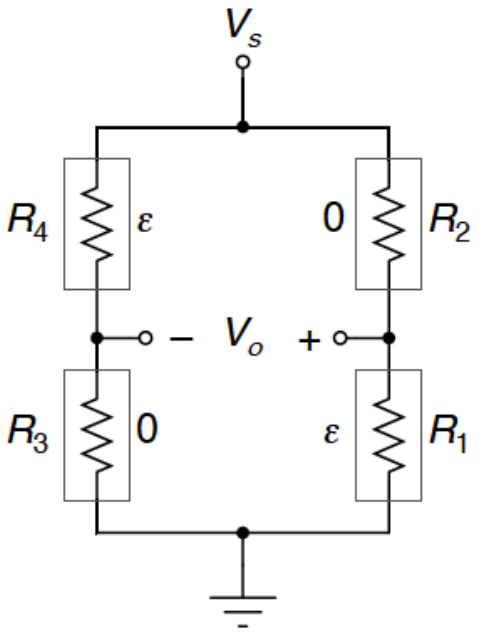

$$R_1 = R_4 = R_{nom}(1 + G\epsilon)$$
$$R_2 = R_3 = R_{nom}$$

• Find the output voltage V_o as a function of stress σ.

$$V_o = \frac{R_1}{R_1 + R_2} - \frac{R_3}{R_3 + R_4} V_s$$
$$= \left(\frac{R_{nom}(1 + G\sigma/\epsilon)}{R_{nom}(1 + G\sigma/\epsilon) + R_{nom}} - \frac{R_{nom}}{R_{nom}(1 + G\sigma/\epsilon) + R_{nom}} V_s \right) = \frac{G\sigma V_s/E}{2 + G\sigma/E}$$

• Find the sensitivity and offset of the stress transducer. You may assume that the applied stress is sufficiently small in magnitude such that $|\frac{G}{E}\sigma| \ll 1$.

Zero Offset : $V_o = \frac{G\sigma V_s/E}{2+G\sigma/E} = 0$ for $\sigma = 0$.

Sensitivity for small σ : $\frac{dV_o}{d\sigma} =\approx \frac{1}{2} G V_s/E = 0.5 \frac{V}{kPa}$ assuming that $2 + \frac{G}{E}\sigma \approx 2$.

• Find the number of bits and voltage range needed in analog to digital conversion of the transducer output in order to digitize the stress signal σ with 1 Pa resolution over a range from -500 Pa to +500 Pa.

Range :

$\sigma_{min} = -500kPa \longrightarrow V_{o_{min}} = -0.5kPa \cdot 0.5 \frac{V}{kPa} = -0.25V$.

$\sigma_{max} = +500kPa \longrightarrow V_{o_{min}} = +0.5kPa \cdot .5 \frac{V}{kPa} = +0.25V$.

Resolution :

$\Delta\sigma = 1Pa \longrightarrow \Delta\sigma = 2^{-n}(\sigma_{max} - \sigma_{min})$

number of bits :

$n \geq \log_2 \left(\frac{\sigma_{max} - \sigma_{min}}{\Delta\sigma} \right) \approx 10$

• Why is it helpful to have four strain gauges, even though only two of these are actually subjected to strain? Explain what happens to the temperature sensitivity and accuracy of stress measurement if the gauges R_2 and R_3 were replaced with plain resistors.

Nominal resistance and temperature coefficient are matched across strain gauges,but not between strain gauges and plain resistors.

$R_1 = R_4 = R_{nom,G}(1 + \alpha_G \Delta T)$

$R_2 = R_3 = R_{nom,R}(1 + \alpha_R \Delta T)$

If $R_{nom,G} \neq R_{nom,R}$ then there will be accuracy loss due to non zero offset.

If $\alpha_G \neq \alpha_R$ then there will be non-zero temperature sensitivity.

• Assume that in addition to the stress $+\sigma$, you have its complement $-\sigma$ available for measurement. Show how to modify the setup of the transducer with four strain gauges to make use of the differential stress in order to increase the sensitivity of the stress transducer, while improving the accuracy of stress measurement by improving its linearity.

Using standard double-differential strain gauge Wheatstone bridge

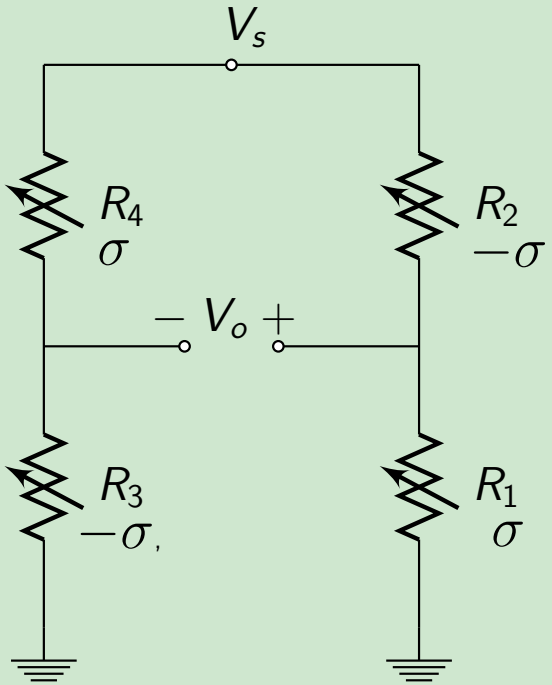

$$R_2 = R_3 = R_{nom}(1 - G\frac{\sigma}{E})$$
$$R_1 = R_4 = R_{nom}(1 + G\frac{\sigma}{E})$$
$$V_o = \left(\frac{R_{nom}(1+G\frac{\sigma}{E})}{R_{nom}(1+G\frac{\sigma}{E})+R_{nom}(1-G\frac{\sigma}{E})}\right) V_s$$
$$- \left(\frac{R_{nom}(1-G\frac{\sigma}{E})}{R_{nom}(1+G\frac{\sigma}{E})+R_{nom}(1-G\frac{\sigma}{E})})\right) V_s$$
$$= \left(\frac{1}{2}G\frac{\sigma}{E} - \left(-\frac{1}{2}G\frac{\sigma}{E}\right)\right) V_s = \frac{G}{E}V_s\sigma$$

The sensitivity is doubled $\frac{G}{E}V_s = 1\frac{V}{kPa}$ with perfect linearity with strain σ.

Self Study Question

Consider the temperature-to-voltage transducer shown below, with constant supply voltage and two pairs of identical thermistors R_{Th1} and R_{Th2}.

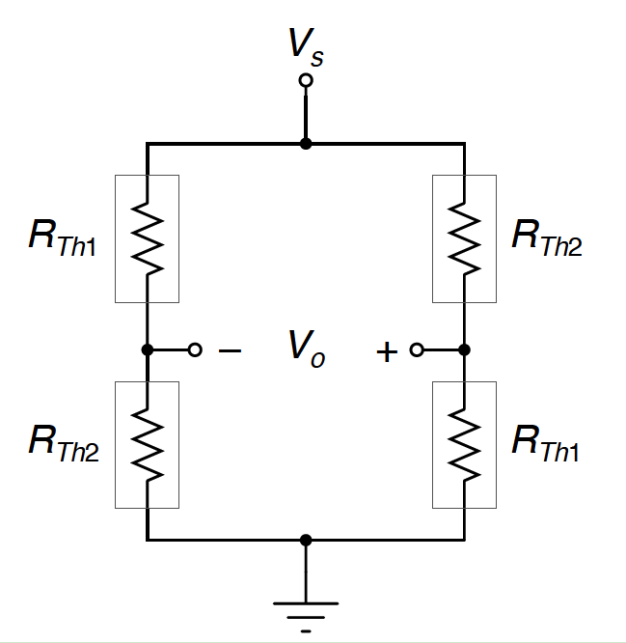

$$R_{Th1} = R_{nom}(1 + \alpha_1 T)$$
$$R_{Th2} = R_{nom}(1 + \alpha_2 T)$$

• Find the output voltage V_o as a function of temperature T, supply voltage V_s, nominal resistances R_{nom1} and R_{nom2}, and temperature coefficients α_1 and α_2.

$$V_o = \frac{R_{Th1}}{R_{Th1} + R_{Th2}} - \frac{R_{Th2}}{R_{Th1} + R_{Th2}} V_s = \frac{R_{Th1} - R_{Th2}}{R_{Th1} + R_{Th2}} V_s$$
$$= \frac{(R_{nom1} - R_{nom2}) + (R_{nom1}\alpha_1 - R_{nom2}\alpha_2)T}{(R_{nom1} + R_{nom2}) + (R_{nom1}\alpha_1 + R_{nom2}\alpha_2)T} V_s$$

• Show that if $R_{nom1}\alpha_1 + R_{nom2}\alpha_2 = 0$ then the transducer is linear.
If $R_{nom1}\alpha_1 + R_{nom2}\alpha_2 = 0$ then
$V_o = \frac{V_s}{R_{nom1}+R_{nom2}}\left(R_{nom1} - R_{nom2} + (R_{nom1}\alpha_1 - R_{nom2}\alpha_2)T\right)$ which is linear in T.

• Find its sensitivity and offset temperature at which the output is zero.
Sensitivity : $\frac{dV_o}{dT} = \frac{(R_{nom1}\alpha_1 - R_{nom2}\alpha_2)}{(R_{nom1}+R_{nom2})}V_s$
Offset Temperature is determined when $V_o = 0$ is established or
$(R_{nom1} - R_{nom2}) + (R_{nom1}\alpha_1 - R_{nom2}\alpha_2)T_{off} = 0$ which yields
$T_{off} = -\frac{R_{nom1}-R_{nom2}}{R_{nom1}\alpha_1 - R_{nom2}\alpha_2}$